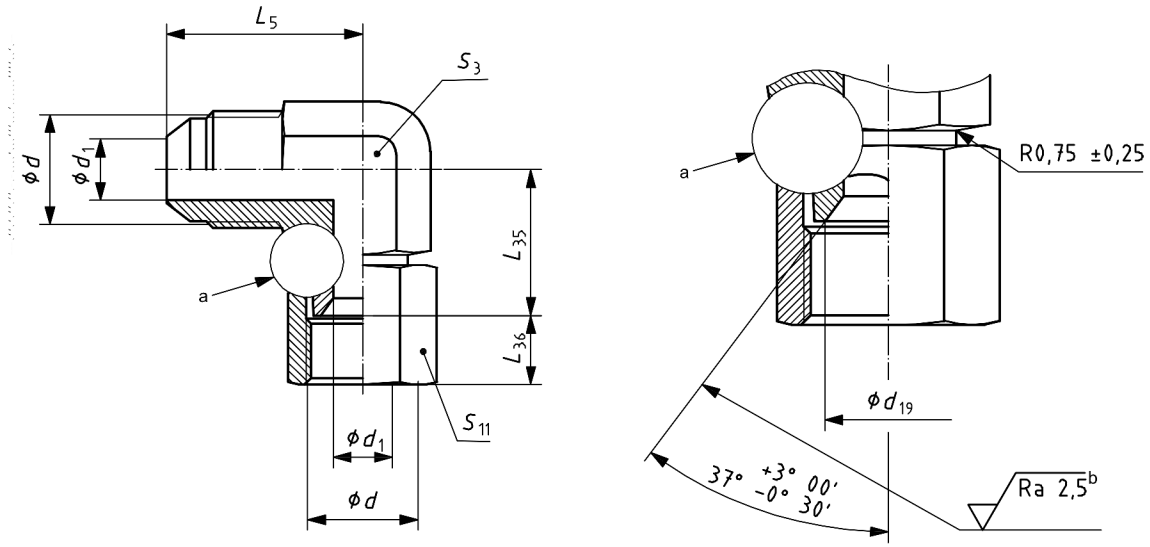

a) Swivel elbow (SWE)

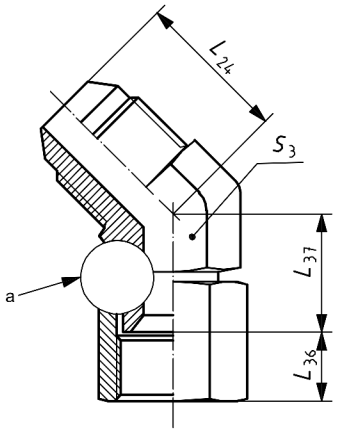

b) 45° swivel elbow (SWE45)

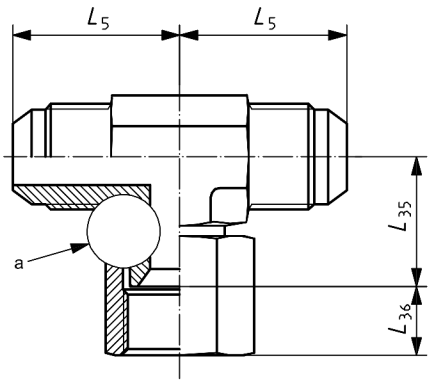

c) Swivel branch tee (SWBT)

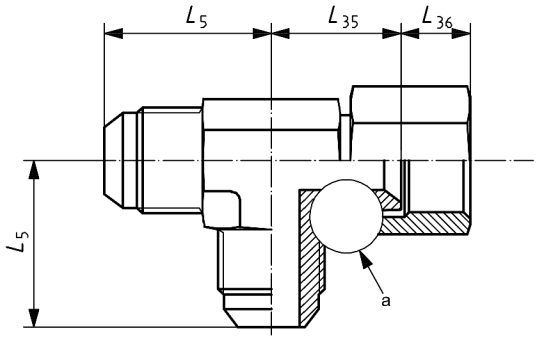

d) Swivel run tee (SWRT)

NOTE For details not shown here, see Figure 4 and Table 7.

[a] Method of attachment of swivel nut is at the option of the manufacturer.

[b] No axial tool marks are allowed on this surface; for spiral tool marks, a surface roughness value $Ra \leqslant 1{,}6$ µm shall be used.

Figure 16 — Swivel connector

Table 19 — Dimensions of swivel connectors

Dimensions in millimetres

Ordering size code [a]	Tube OD [b]	Thread [c] d	d_1 ref.	d_{19} ± 0,25	L_5 ref.	L_{24} ± 1	L_{35} ± 1,5	L_{36} $^{+0,8}_{-0,4}$	L_{37} ± 1,5	S_3 ref.	S_{11}
6 × 6	6	7/16-20 UNF	4,4	7,35	22,5	18,5	16,7	8,7	15,2	12	14
8 × 8	8	1/2-20 UNF	6	8,90	24	19,5	17,4	9,5	15,9	14	17
10 × 10	10	9/16-18 UNF	7,5	10,90	27	21	22,3	9,5	18,9	14	19
12 × 12	12	3/4-16 UNF	9,9	14,35	32	25	24,4	10,7	21,8	19	22
16 × 16	16	7/8-14 UNF	12,3	17,15	37	28	28,4	12,7	23,9	22	27
20 × 20	20	1 1/16-12 UN	15,5	21,45	42	32,5	30,1	14,3	23,8	27	32
25 × 25	25	1 5/16-12 UN	21,5	27,80	46	37,5	35,7	15,1	29,3	32	41
32 × 32	32	1 5/8-12 UN	27,5	35,70	52,5	40,5	42,8	15,9	35,7	41	50
38 × 38	38	1 7/8-12 UN	33,5	41,15	59	45	47,2	18,6	38,6	50	60
50 × 50	50	2 1/2-12 UN	45	56,75	77,5	56,5	62,1	23,8	50,1	65	75

[a] Code given is for straights and elbows. Add third end size for tees using left, right, up-and-down sequence, omitting ends when not present.

[b] See Table 1 for corresponding inch sizes.

[c] In accordance with ISO 263, ISO 68-2 and ISO 5864.